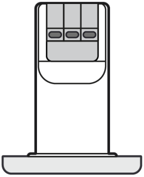

a

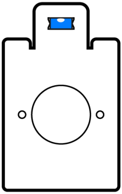

b

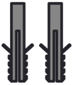

c

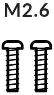

d

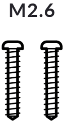

e

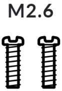

f

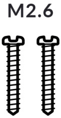

g

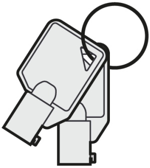

h

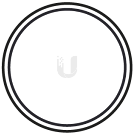

i

1

A

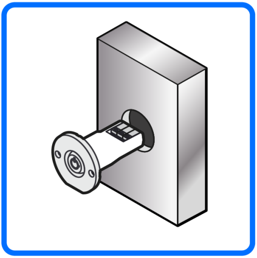

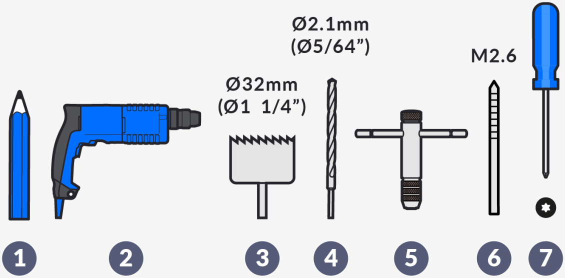
Ø2.1mm
(Ø5/64”)
M2.6
Ø32mm
(Ø1 1/4”)
1
2
3
4
5
6
7

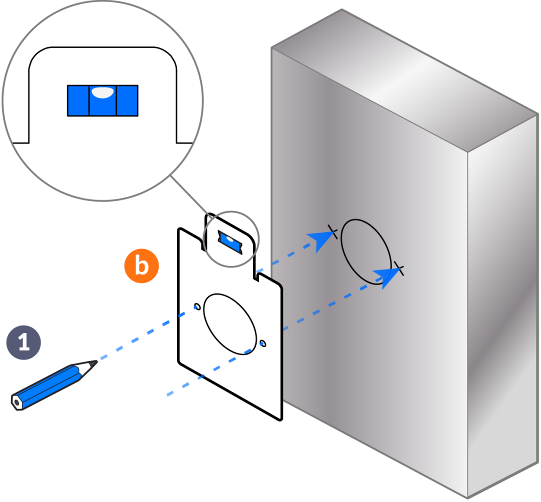

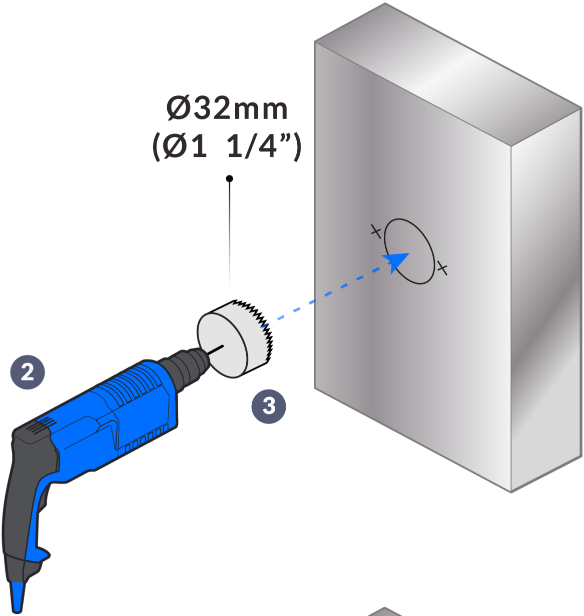
Ø32mm
(Ø1 1/4”)
2
3

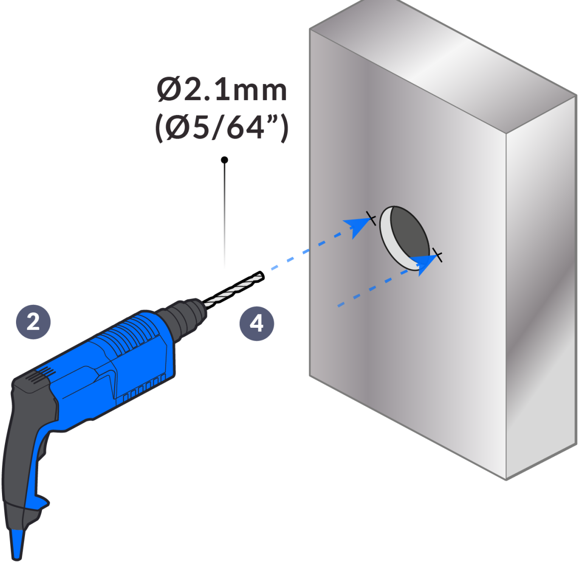
Ø2.1mm
(Ø5/64”)
2
4

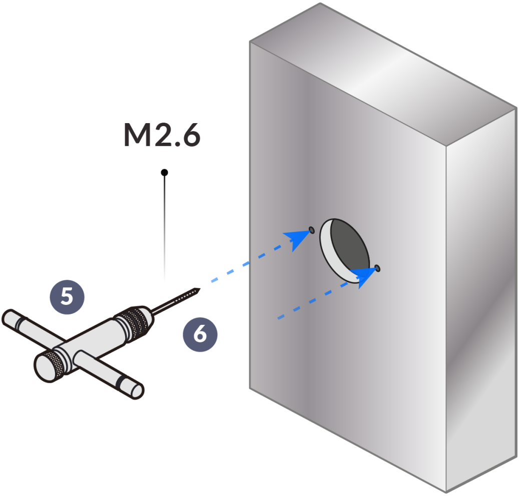

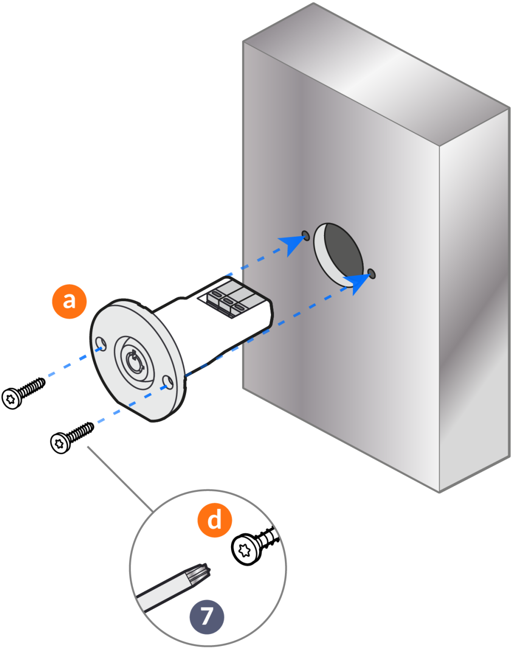

B

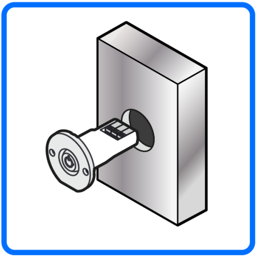

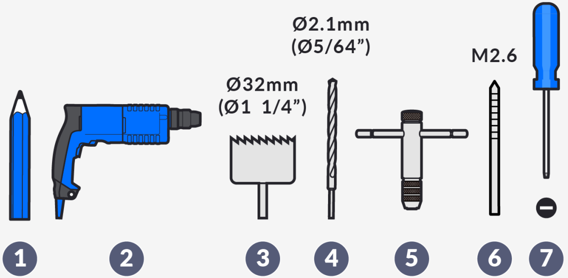
Ø2.1mm
(Ø5/64”)
M2.6
Ø32mm
(Ø1 1/4”)
1
2
3
4
5
6
7

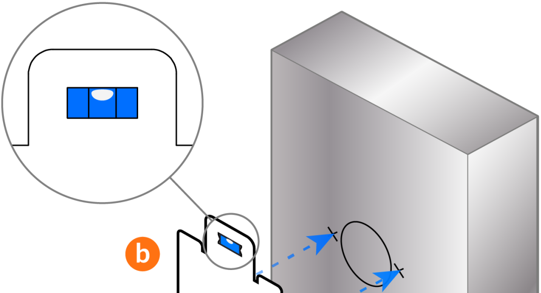

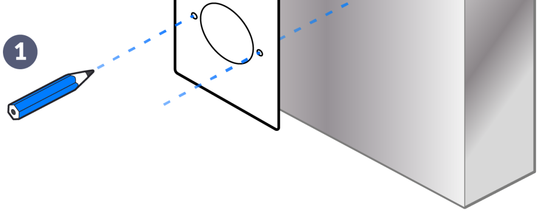

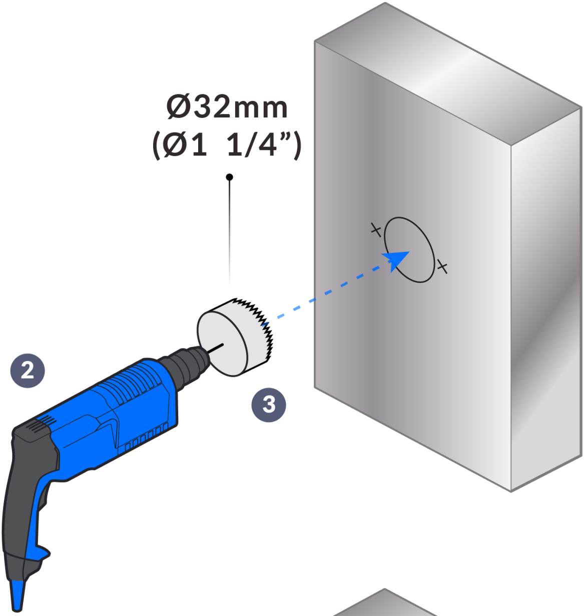
Ø32mm
(Ø1 1/4”)
2
3

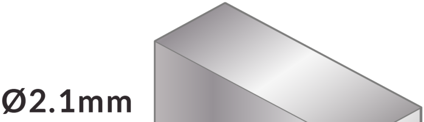

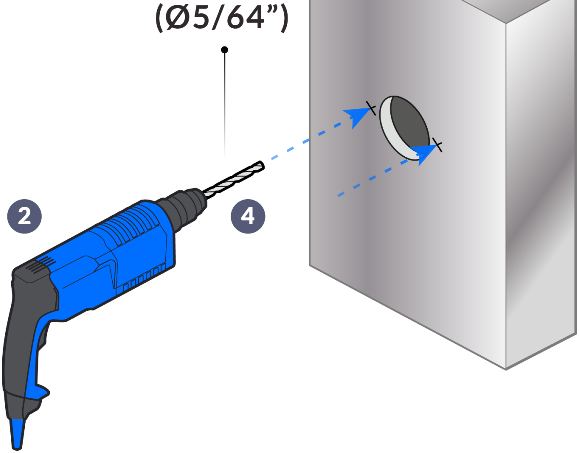

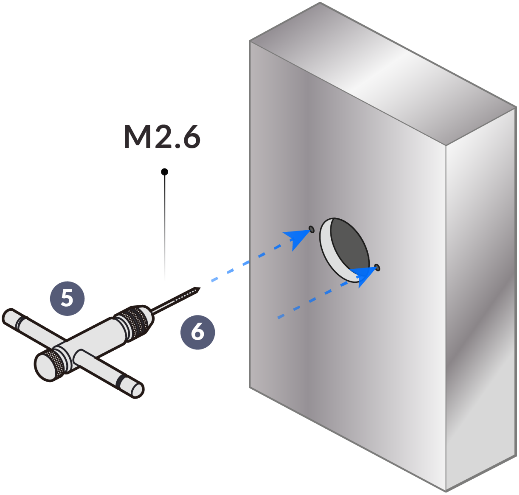

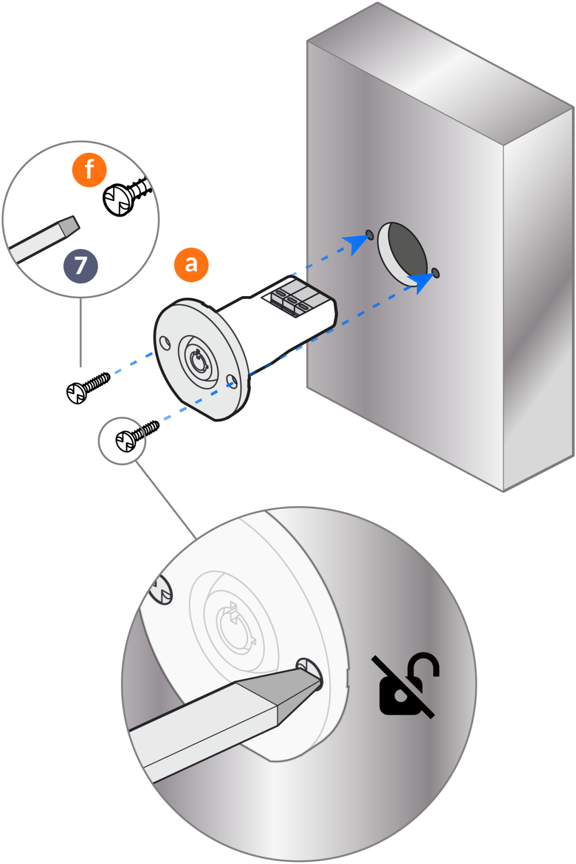

C

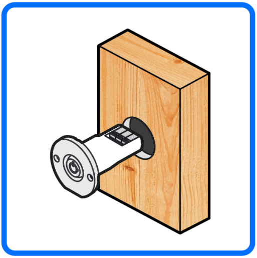

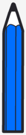

1

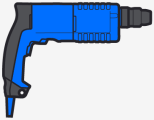

2

Ø32mm
(Ø1 1/4")

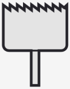

3

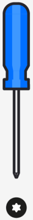

4

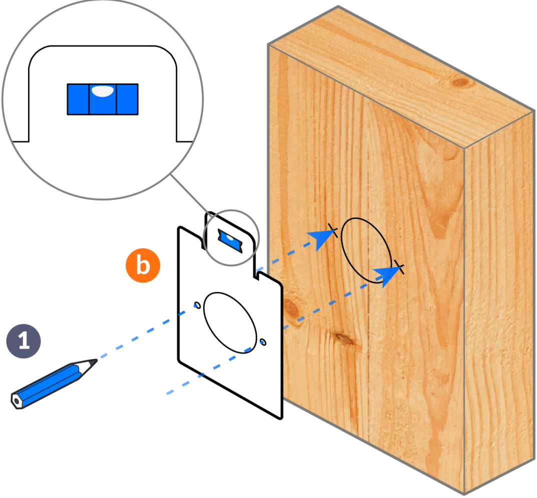

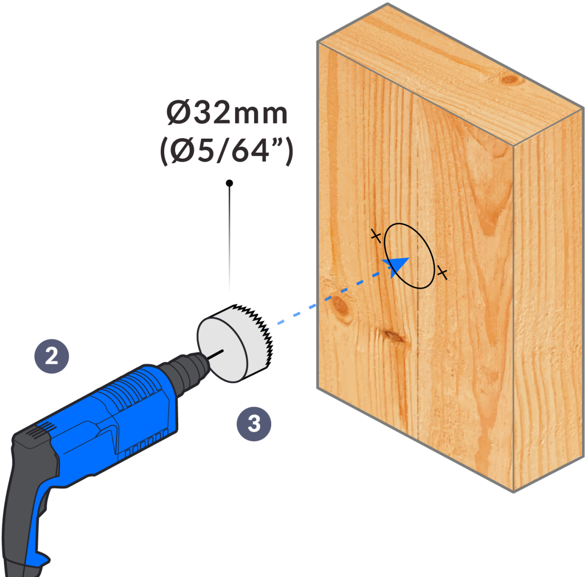
Ø32mm
(Ø5/64”)
2
3

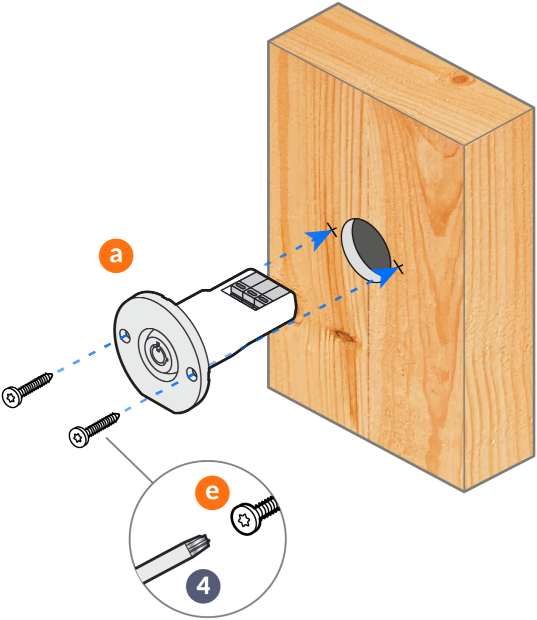

D

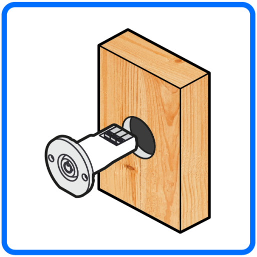

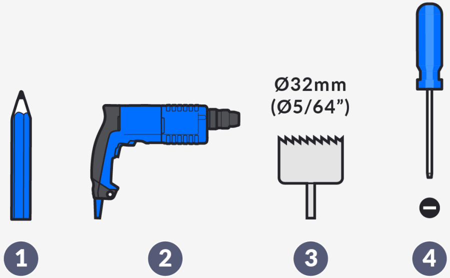
Ø32mm
(Ø5/64”)
1
2
3
4

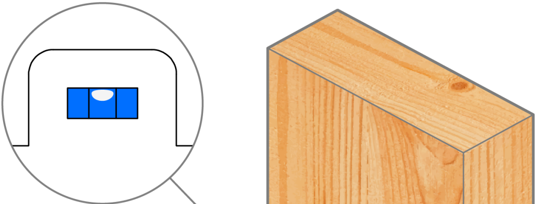

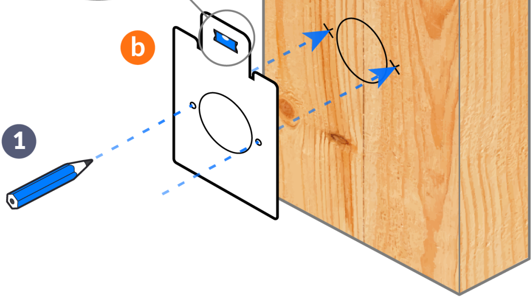

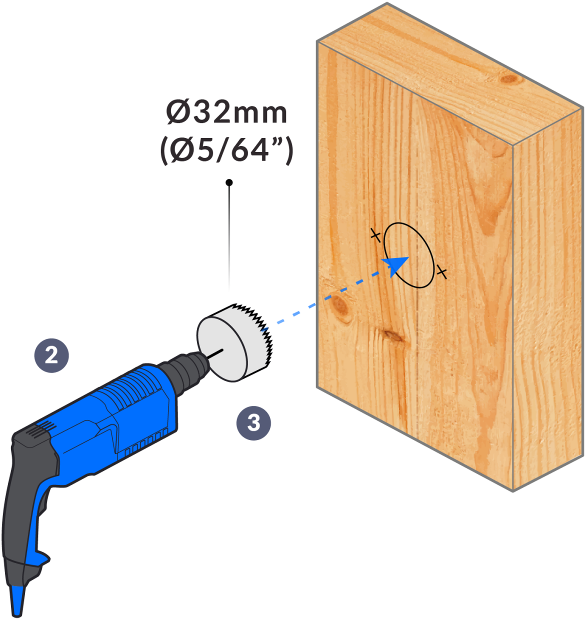
Ø32mm
(Ø5/64”)
2
3

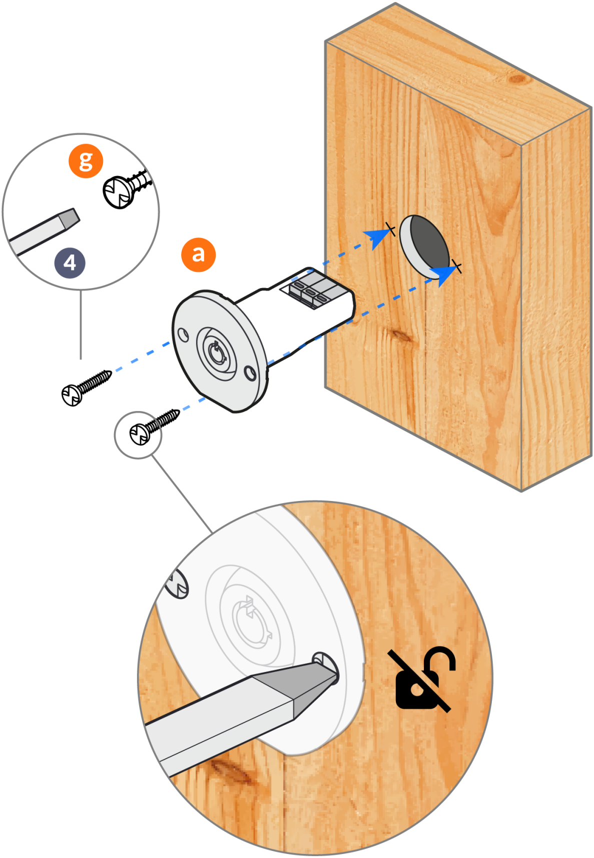

2

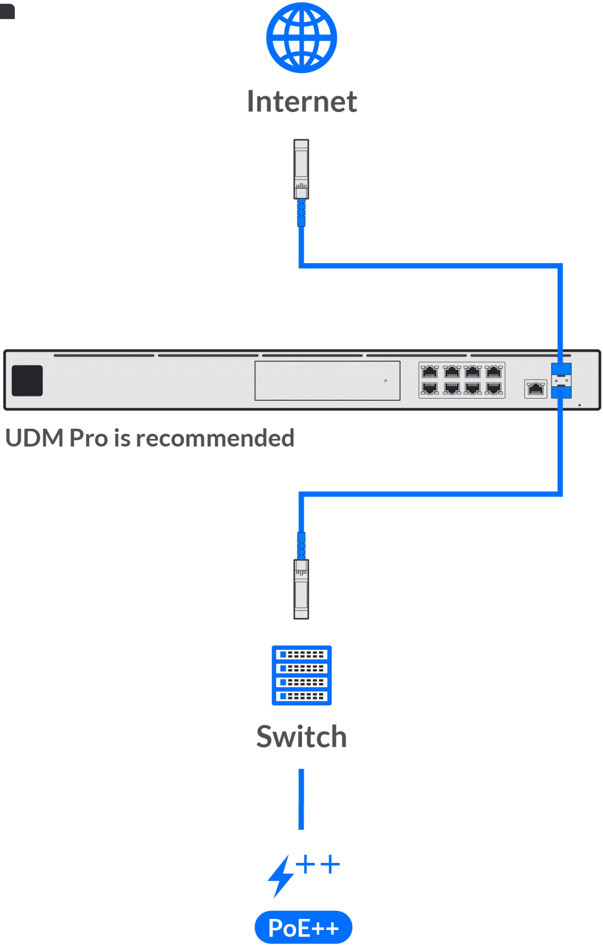
Internet
UDM Pro is recommended
Switch
PoE++

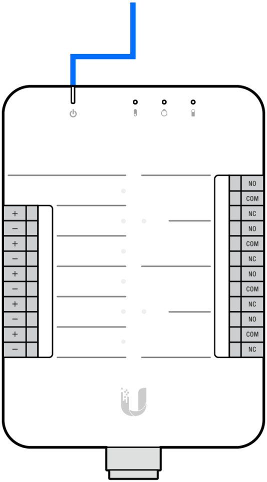
+
−
+
−
+
−
+
−
+
−
+
−
NO
COM
NC
NO
COM
NC
NO
COM
NC
NO
COM
NC

3

A

Magnectic Lock / Power Relay

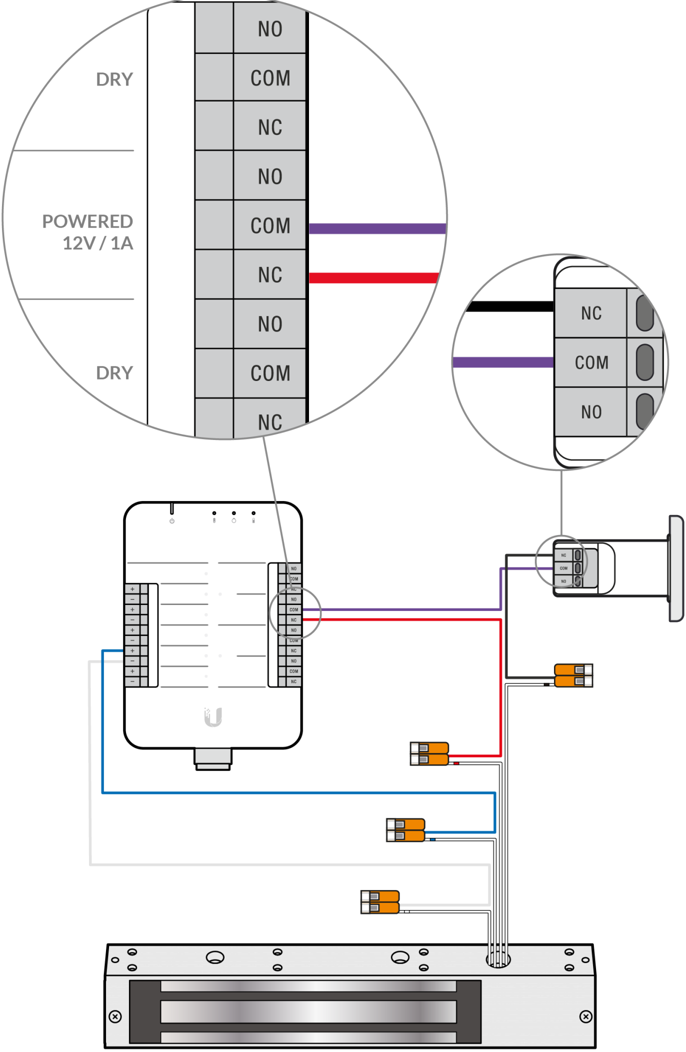
DRY
POWERED
12V / 1A
DRY
NO
COM
NC
NO
COM
NC
NO
COM
NC
NC
COM
NO

B

Magnectic Lock / Dry Relay

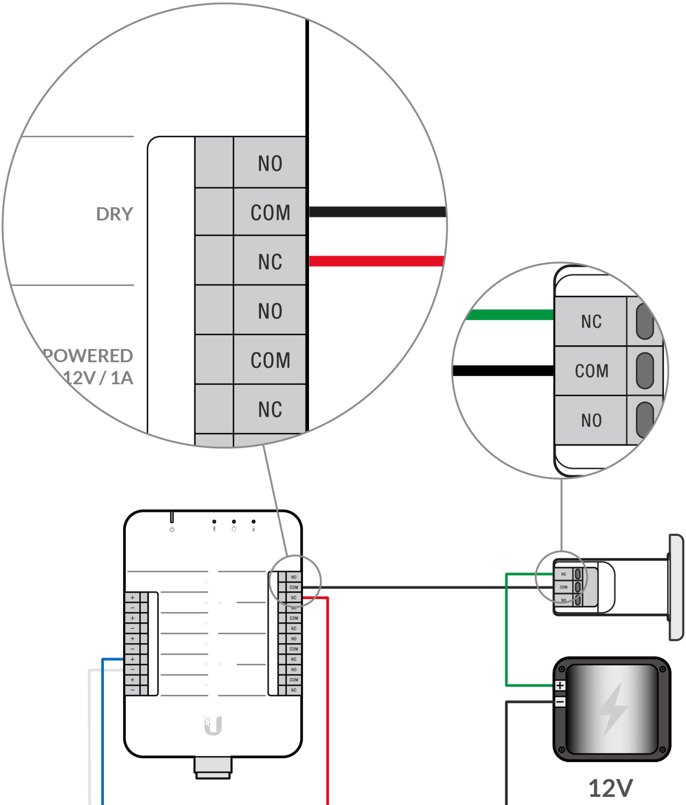
DRY
NO
COM
NC
NO
COM
NC
POWERED
12V / 1A
NC
COM
NO
+
−
12V

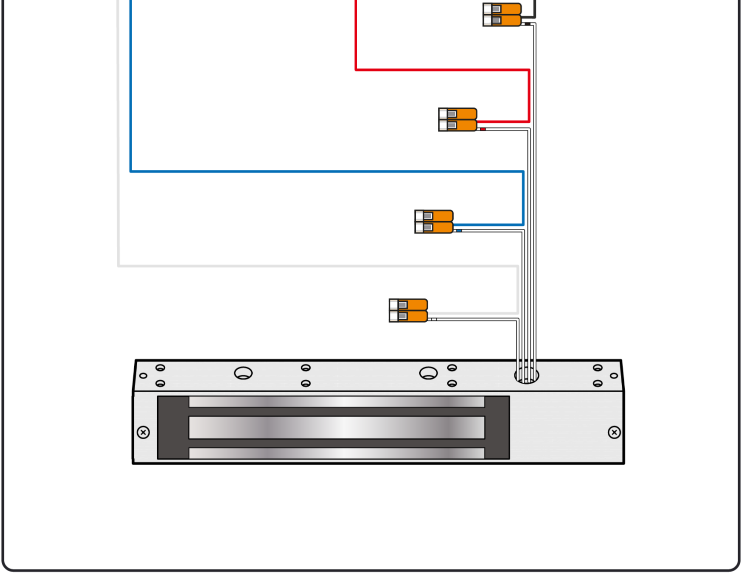

C

Electric Lock / Power Relay

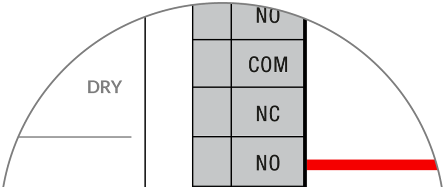
DRY
NO
COM
NC
NO

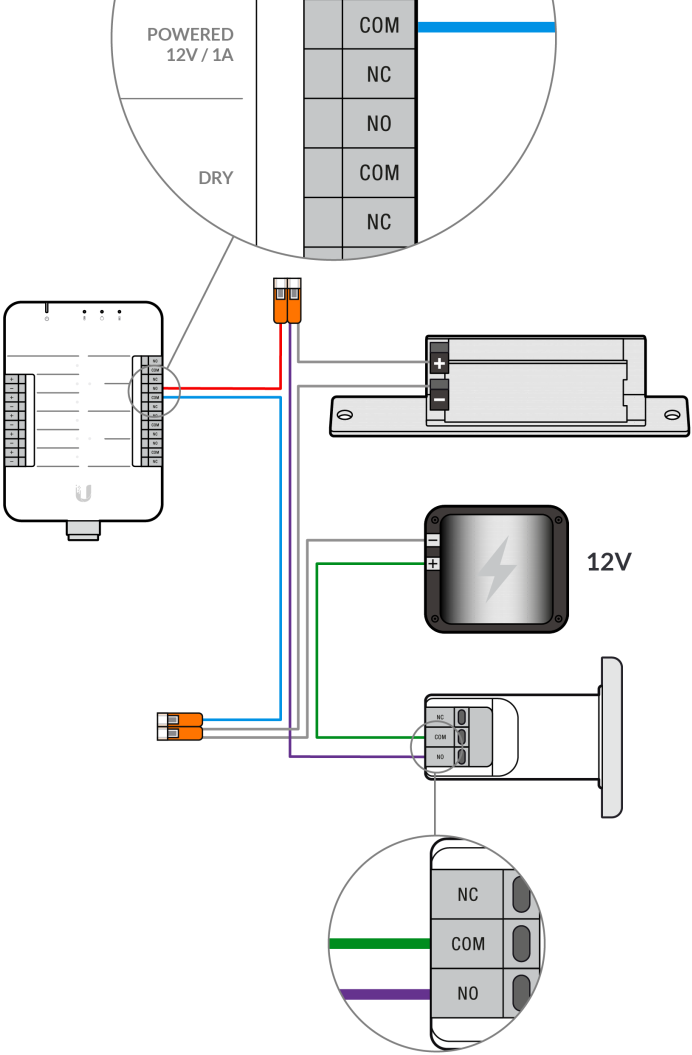
POWERED
12V / 1A
DRY
COM
NC
NO
COM
NC
12V
NC
COM
NO
NC
COM
NO

D

Electric Lock / Dry Relay

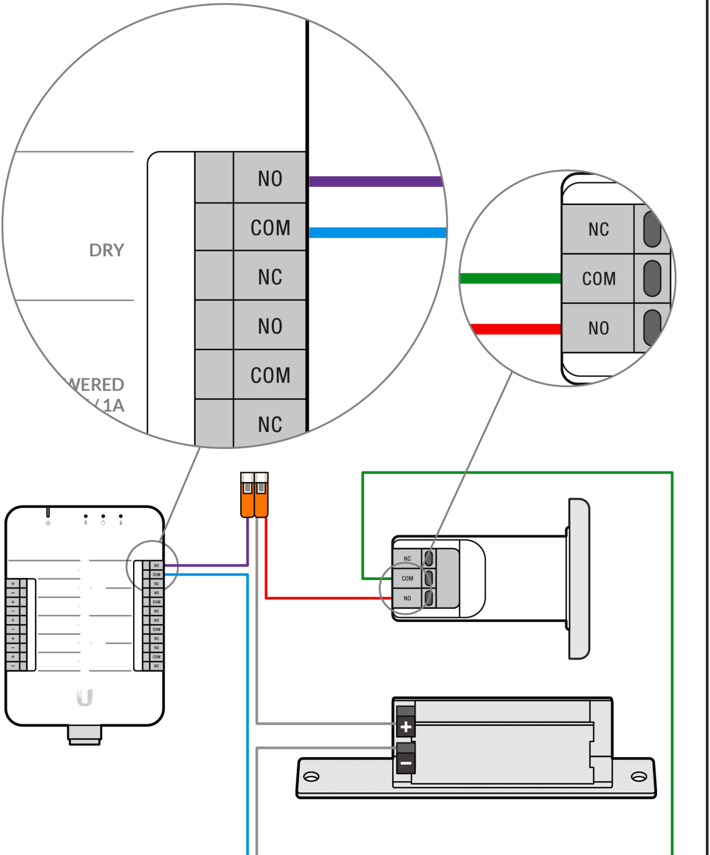
NO
COM
NC
NO
COM
NC
DRY
WERED
/ 1A
NC
COM
NO
NC
COM
NO
+
−

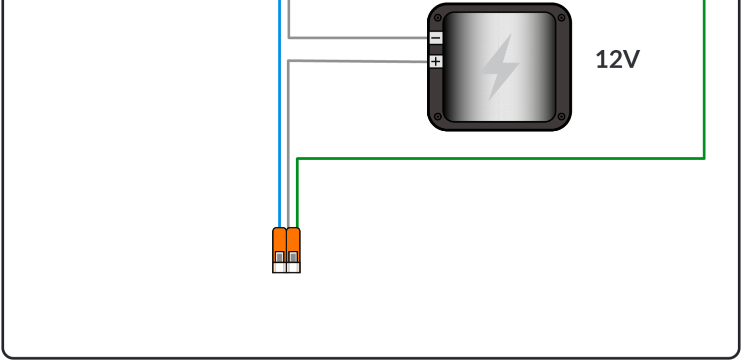

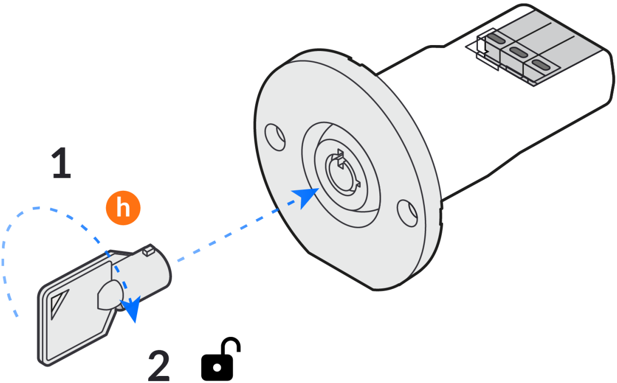

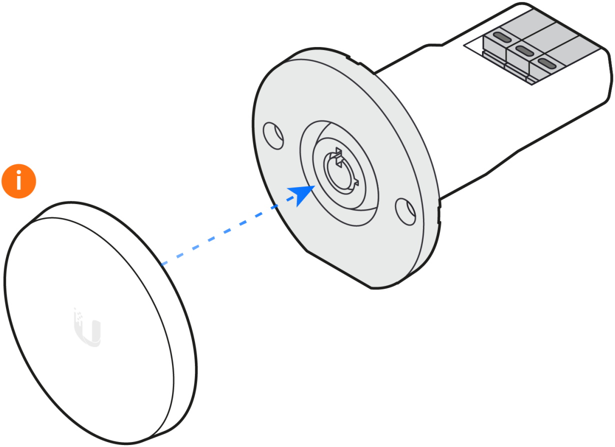

Get Answers
help.ui.com

UI Support

©2021 Ubiquiti Inc. All rights reserved. Ubiquiti, Ubiquiti Networks, the Ubiquiti U logo, UniFi, and AirFiber are trademarks or registered trademarks of Ubiquiti Inc. in the United States and in the United States and in other countries. Apple and the Apple logo are trademarks of Apple Inc., registered in the U.S. and other countries. App Store and the Apple logo are trademarks of Apple Inc., registered in the U.S. and other countries. Android, Google, Google Play, the Google Play logo and other marks are trademarks of Google LLC. All other trademarks are the property of their respective owners.